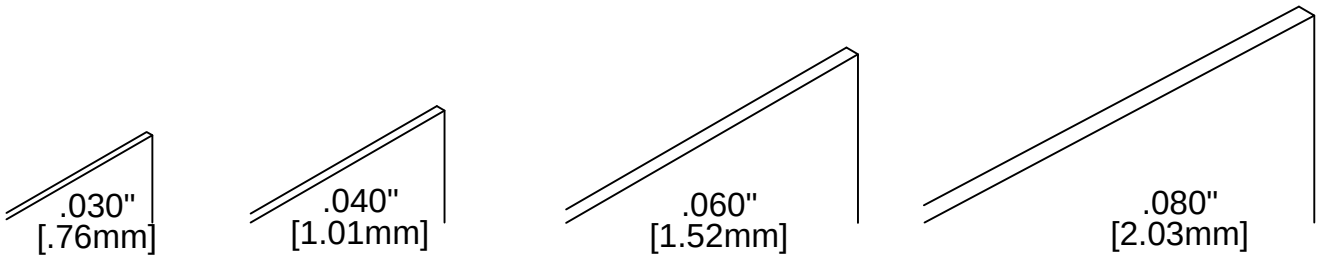

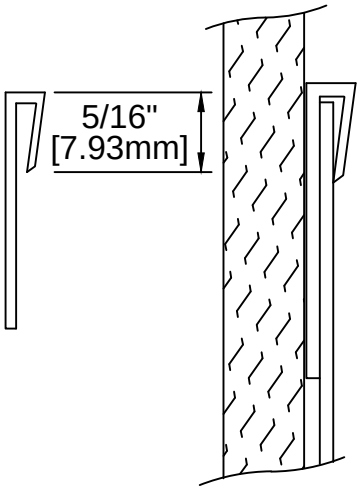

TOP CAP

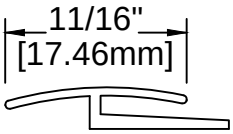

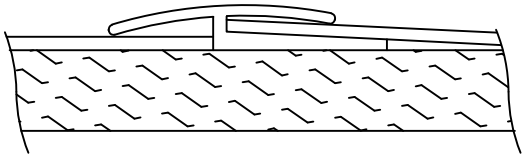

DIVIDER BAR

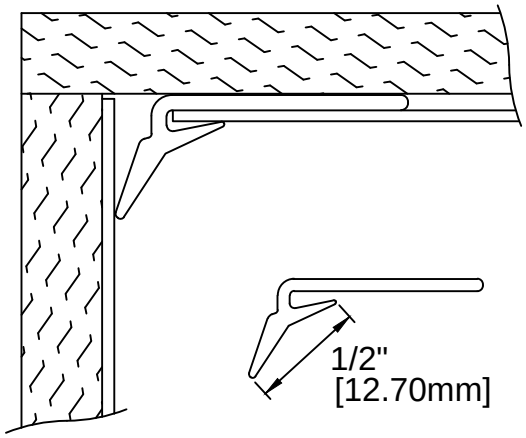

INSIDER CORNER

IPC™ DOOR + WALL PROTECTION SYSTEMS	DATE: 12/08/97	Solid Colored Trim Pieces for IPC® Rigid Sheet	inpro
	SCALE 1:1		
	DOC.CADIPC.095/rev1		